AES50_FrontEnd

File: AES50_FrontEnd.kicad_sch

FPGA

File: fpga.kicad_sch

Power

File: Power.kicad_sch

Misc

File: Misc.kicad_sch

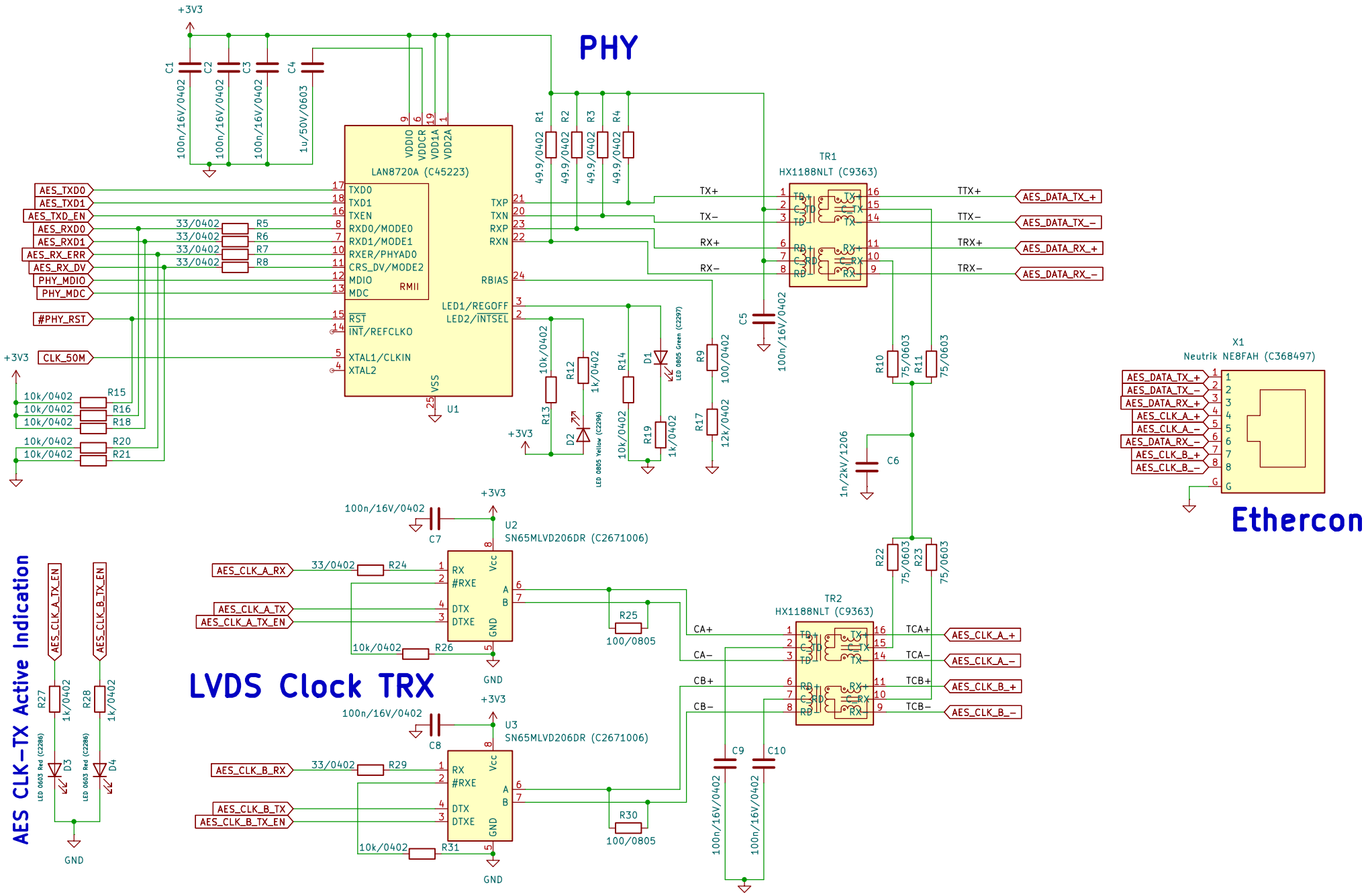
PHY
LAN8720A (C45223)
U1
TR1
HX1188NLT (C9363)
X1
Neutrik NE8FAH (C368497)
Ethercon
LVDS Clock TRX
U2
SN65MLVD206DR (C2671006)
U3
SN65MLVD206DR (C2671006)
TR2
HX1188NLT (C9363)
AES CLK-TX Active Indication
+3V3
GND
AES_TXD0
AES_TXD1
AES_TXD_EN
AES_RXD0
AES_RXD1
AES_RX_ERR
AES_RX_DV
PHY_MDIO
PHY_MDC
#PHY_RST
CLK_50M
AES_DATA_TX_+
AES_DATA_TX_–
AES_DATA_RX_+
AES_DATA_RX_–
AES_CLK_A_+
AES_CLK_A_–
AES_CLK_B_+
AES_CLK_B_–
AES_CLK_A_RX
AES_CLK_A_TX
AES_CLK_A_TX_EN
AES_CLK_B_RX
AES_CLK_B_TX
AES_CLK_B_TX_EN
TX+
TX–
RX+
RX–
TTX+
TTX–
TRX+
TRX–
CA+
CA–
CB+
CB–
TCA+
TCA–
TCB+
TCB–

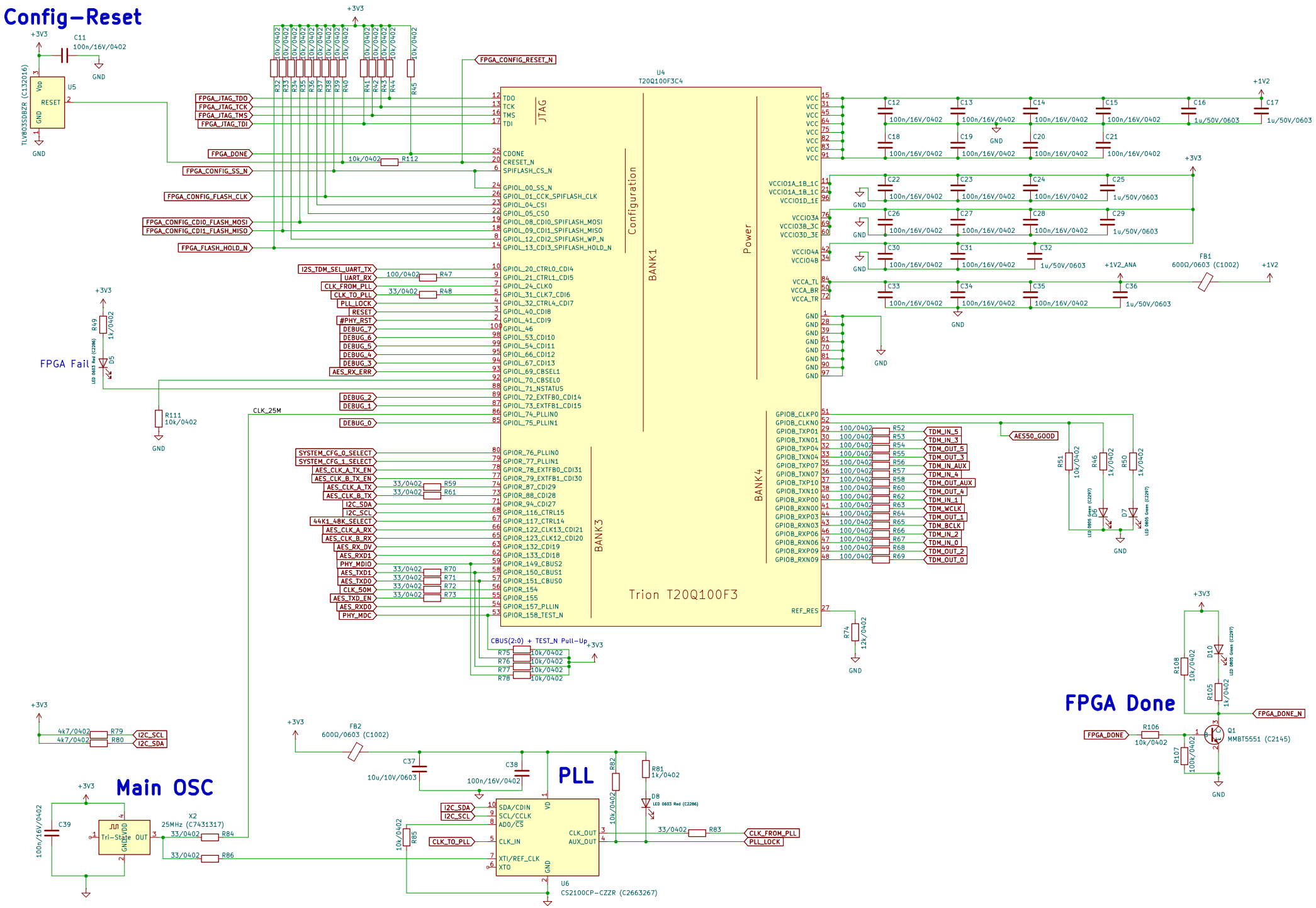
Config-Reset
FPGA Fail
FPGA Done
Main OSC
PLL
Trion T20Q100F3
U4
T20Q100F3C4
JTAG
Configuration
BANK1
BANK3
BANK4
Power
U5
TLV803SDBZR (C132016)
U6
CS2100CP-CZZR (C2663267)
X2
25MHz (C7431317)
FB1
600Ω/0603 (C1002)
FB2
600Ω/0603 (C1002)
Q1
MMBT5551 (C2145)
CBUS(2:0) + TEST_N Pull-Up
CLK_25M
FPGA_CONFIG_RESET_N
FPGA_JTAG_TDO
FPGA_JTAG_TCK
FPGA_JTAG_TMS
FPGA_JTAG_TDI
FPGA_DONE
FPGA_CONFIG_SS_N
FPGA_CONFIG_FLASH_CLK
FPGA_CONFIG_CDI0_FLASH_MOSI
FPGA_CONFIG_CDI1_FLASH_MISO
FPGA_FLASH_HOLD_N
I2S_TDM_SEL_UART_TX
UART_RX
CLK_FROM_PLL
CLK_TO_PLL
PLL_LOCK
RESET
#PHY_RST
DEBUG_7
DEBUG_6
DEBUG_5
DEBUG_4
DEBUG_3
AES_RX_ERR
DEBUG_2
DEBUG_1
DEBUG_0
SYSTEM_CFG_0_SELECT
SYSTEM_CFG_1_SELECT
AES_CLK_A_TX_EN
AES_CLK_B_TX_EN
AES_CLK_A_TX
AES_CLK_B_TX
I2C_SDA
I2C_SCL
44K1_48K_SELECT
AES_CLK_A_RX
AES_CLK_B_RX
AES_RX_DV
AES_RXD1
PHY_MDIO
AES_TXD1
AES_TXD0
CLK_50M
AES_TXD_EN
AES_RXD0
PHY_MDC
AES50_GOOD
TDM_IN_5
TDM_IN_3
TDM_OUT_5
TDM_OUT_3
TDM_IN_AUX
TDM_IN_4
TDM_OUT_AUX
TDM_OUT_4
TDM_IN_1
TDM_WCLK
TDM_OUT_1
TDM_BCLK
TDM_IN_2
TDM_IN_0
TDM_OUT_2
TDM_OUT_0
FPGA_DONE_N
+3V3
+1V2
+1V2_ANA
GND

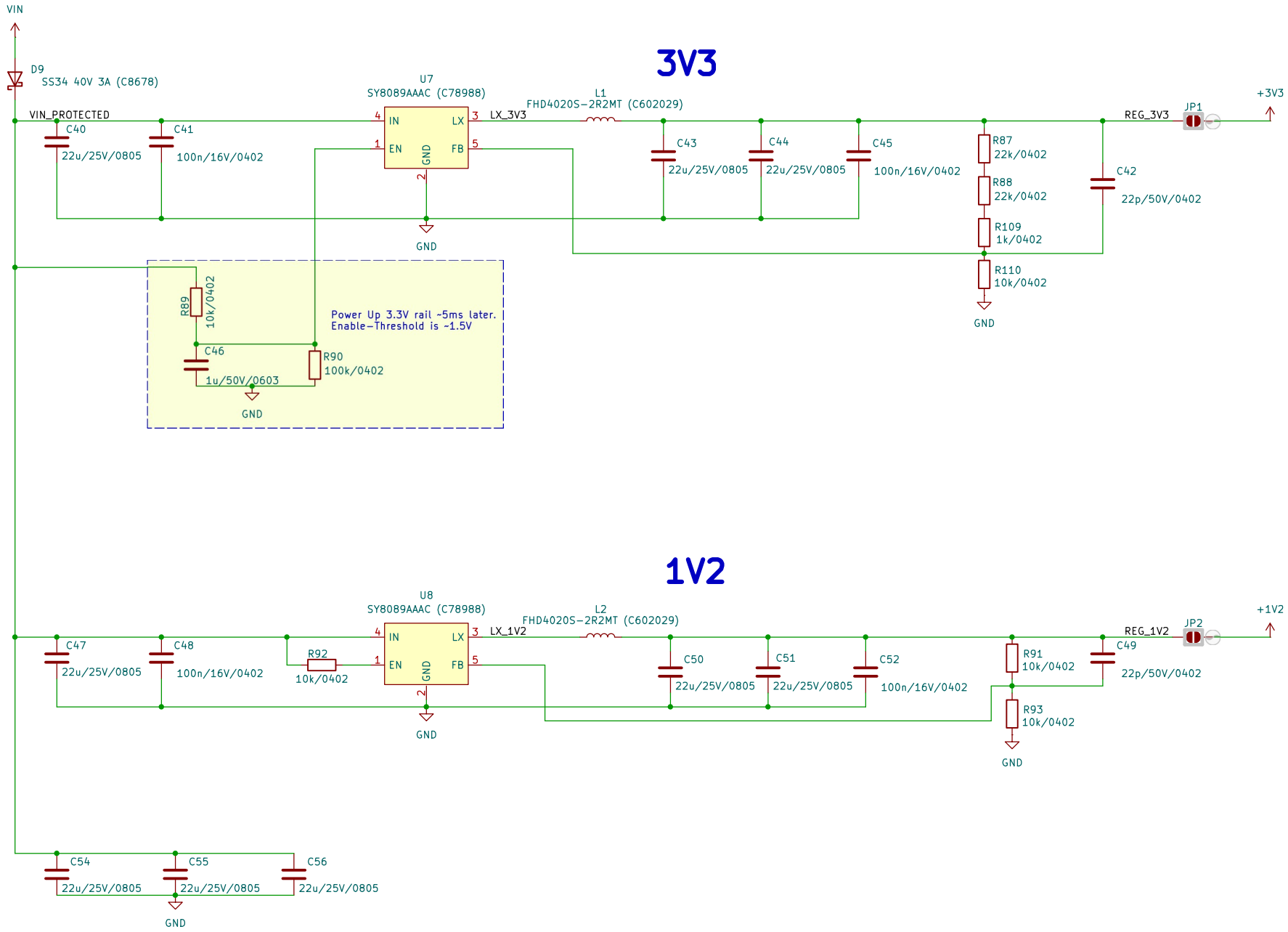
3V3
VIN
D9
SS34 40V 3A (C8678)
VIN_PROTECTED
C40
22u/25V/0805
C41
100n/16V/0402
U7
SY8089AAAC (C78988)
IN
EN
LX
FB
GND
LX_3V3
L1
FHD4020S-2R2MT (C602029)
C43
22u/25V/0805
C44
22u/25V/0805
C45
100n/16V/0402
R87
22k/0402
R88
22k/0402
R109
1k/0402
R110
10k/0402
C42
22p/50V/0402
REG_3V3
JP1
+3V3
R89
10k/0402
C46
1u/50V/0603
R90
100k/0402
Power Up 3.3V rail ~5ms later.
Enable-Threshold is ~1.5V
1V2
U8
SY8089AAAC (C78988)
C47
22u/25V/0805
C48
100n/16V/0402
R92
10k/0402
LX_1V2
L2
FHD4020S-2R2MT (C602029)
C50
22u/25V/0805
C51
22u/25V/0805
C52
100n/16V/0402
R91
10k/0402
R93
10k/0402
C49
22p/50V/0402
REG_1V2
JP2
+1V2
C54
22u/25V/0805
C55
22u/25V/0805
C56
22u/25V/0805

# Reset Button

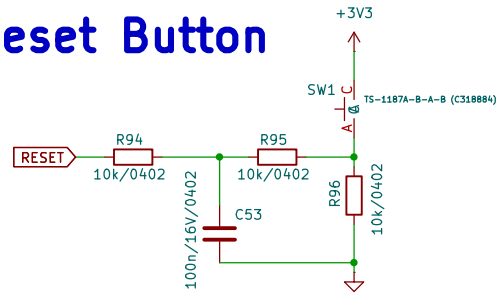


# Configuration Switches

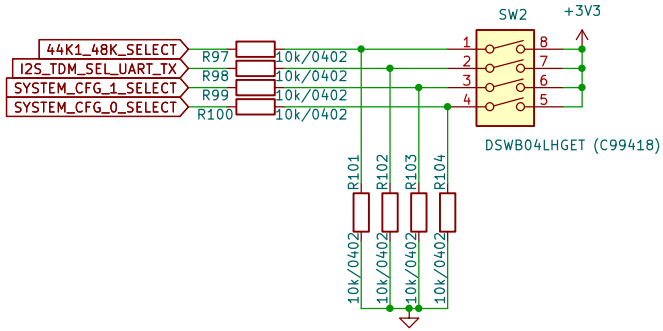


# Debug

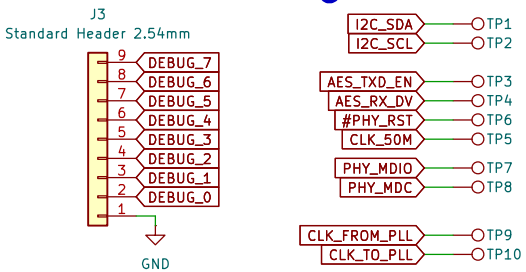


# Main Interface Header

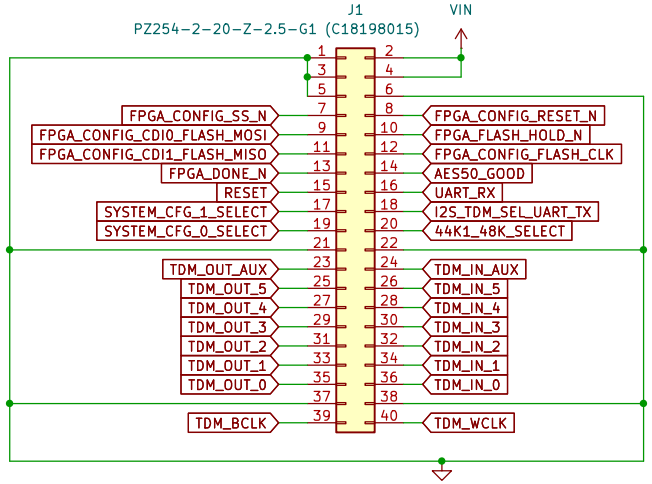


# JTAG

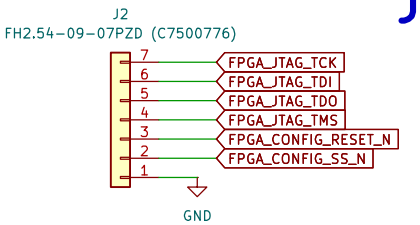

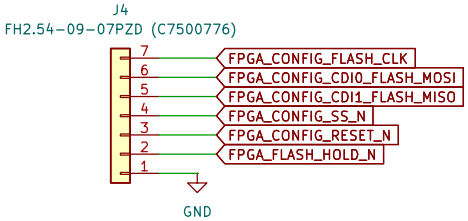
# SPI Programming